Rubber Metal anti vibration mounts

SOLID CONE

The AMC-Mecanocaucho® cones work the rubber in shear compression. They are composed of two parallel conical metal parts. They have two washers, one as a buffer and the other for centering.

TECHNICAL CHARACTERISTICS

The AMC-Mecanocaucho® Cone mounts are safe and stable elements. They do not allow the suspended elements to tilt, while being flexible enough to avoid the transmission of noise and vibration through the structure.

They are supplied with stop and centering washers. This renders deflection above the limits of the Mecanocaucho® Cones impossible, even at extreme loads.

The washers protect the natural rubber (which is highly elastic and highly resistant) from ozone and aging, as well as from metal knocks and dripping oil. The characteristic deflection curves of the AMC-Mecanocaucho® Cone mounts with centering washer are quite linear, increasing progressively as the load increases. Thanks to this they can safely dampen overloads of up to three times the maximum admissible load.

APPLICATIONS

Mecanocaucho® Cone mounts are specially designed for use in engines and auxiliary machinery, both in static applications and in all types of vehicles.

AMC MECANOCAUCHO
Industrialdea Zona A - Pab. 35.
Asteasu E-20159, Gipuzkoa
Spain

Tel.: +34 943 69 61 02
Fax: +34 943 69 62 19

sales@amcsa.es

www.mecanocaucho.com
www.akustik.com

In order to adapt its products to the state of the art, AMC S.A. reserves the right to modify the conception and manufacture of the materials presented in this catalogue without prior notice.

SOLID CONE

ТЕХНИЧЕСКИЕ РЕШЕНИЯ 2.0 | +7 812 336-58-68 | www.glavmech.ru

DRAWINGS

01

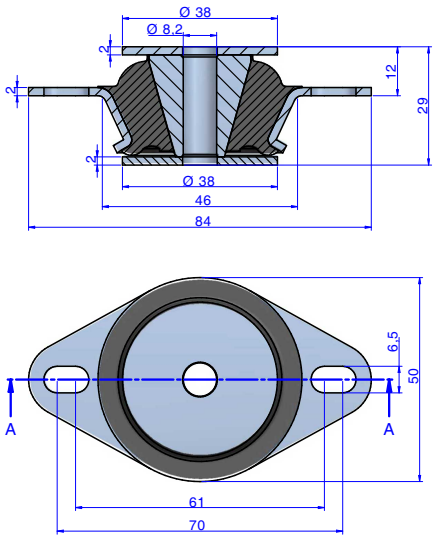

02

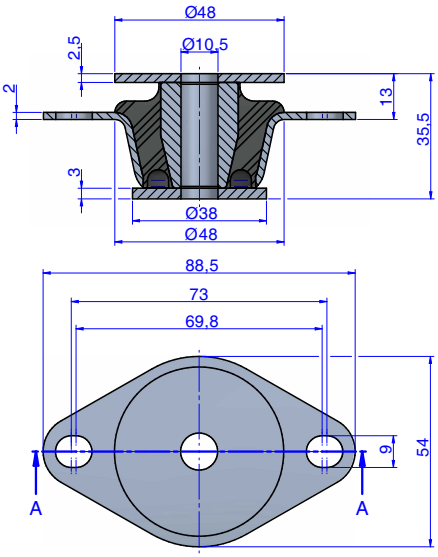

11

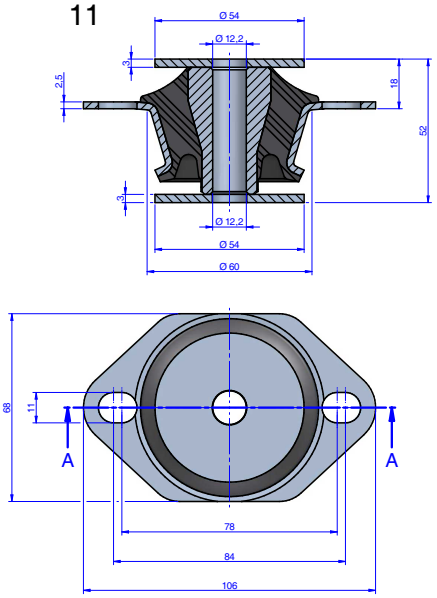

DIMENSIONS

Type	Weight (gr.)	Load (kg)	Shore	Code
01	128	40	45 Sh	137005
		70	60 Sh	137006
		105	70 Sh	137015
02	132	50	45 Sh	137010
		90	60 Sh	137011
11	409	100	45 Sh	137021
		180	60 Sh	137022
		270	70 Sh	137023

AMC MECANOCAUCHO
Industrialdea Zona A - Pab. 35.
Asteasu E-20159, Gipuzkoa
Spain

Tel.: +34 943 69 61 02
Fax: +34 943 69 62 19

sales@amcsa.es

www.mecanocaucho.com
www.akustik.com

In order to adapt its products to the state of the art, AMC S.A. reserves the right to modify the conception and manufacture of the materials presented in this catalogue without prior notice.

SOLID CONE

ТЕХНИЧЕСКИЕ РЕШЕНИЯ 2.0 | +7 812 336-58-68 | www.glavmech.ru

DRAWINGS

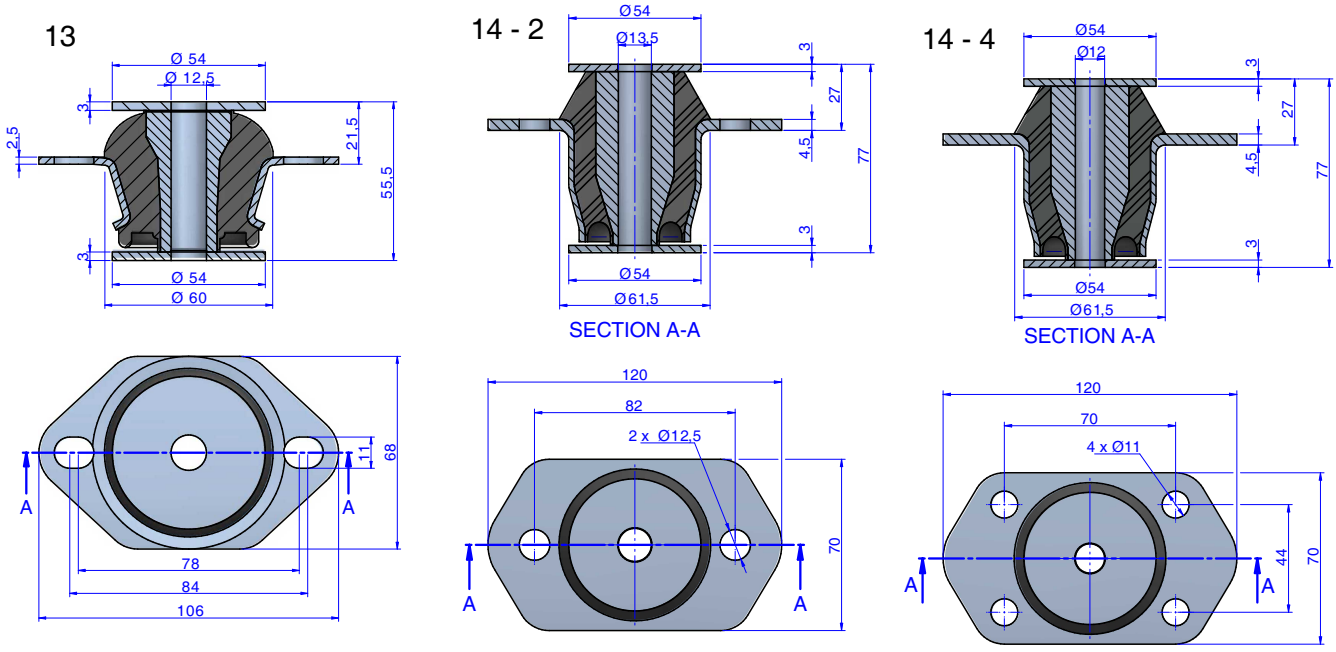

DIMENSIONS

Type	Weight (gr.)	Load (kg)	Shore	Code
13	450	120	45 Sh	137921
		170	55 Sh	137922
		270	70 Sh	137925
14 - 2 holes	643	250	45 Sh	137930
		500	65 Sh	137628
14 - 4 holes	662	250	45 Sh	137935
		450	60 Sh	137936
		690	70 Sh	137937

AMC MECANOCAUCHO
Industrialdea Zona A - Pab. 35.
Asteasu E-20159, Gipuzkoa
Spain

Tel.: +34 943 69 61 02
Fax: +34 943 69 62 19

sales@amcsa.es

www.mecanocaucho.com
www.akustik.com

In order to adapt its products to the state of the art, AMC S.A. reserves the right to modify the conception and manufacture of the materials presented in this catalogue without prior notice.

SOLID CONE

ТЕХНИЧЕСКИЕ РЕШЕНИЯ 2.0 | +7 812 336-58-68 | www.glavmech.ru

DRAWINGS

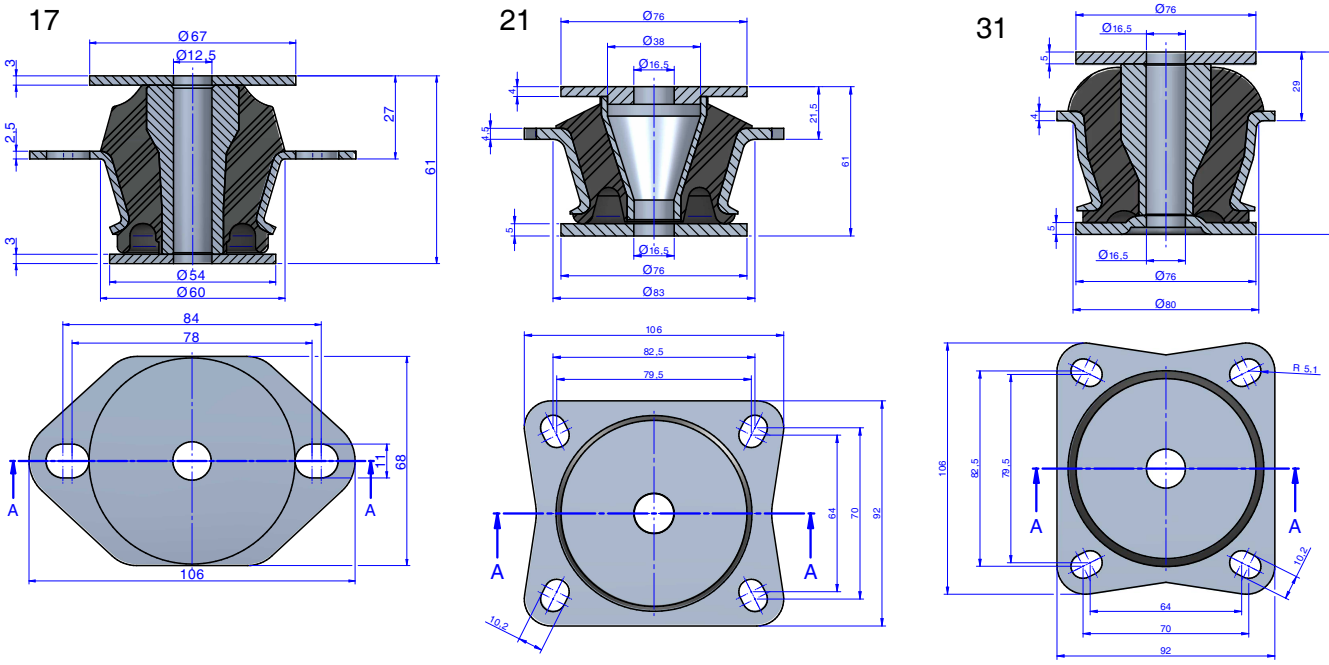

DIMENSIONS

Type	Weight (gr.)	Load (kg)	Shore	Code
17	410	160	45 Sh	137903
		250	60 Sh	137904
		350	70 Sh	137905
21	560	180	45 Sh	137071
		300	60 Sh	137074
		500	70 Sh	137079
31	1188	310	50 Sh	137063
		500	60 Sh	137061
		750	70 Sh	137062

AMC MECANOCAUCHO
Industrialdea Zona A - Pab. 35.
Asteasu E-20159, Gipuzkoa
Spain

Tel.: +34 943 69 61 02
Fax: +34 943 69 62 19

sales@amcsa.es

www.mecanocaucho.com
www.akustik.com

In order to adapt its products to the state of the art, AMC S.A. reserves the right to modify the conception and manufacture of the materials presented in this catalogue without prior notice.

SOLID CONE

ТЕХНИЧЕСКИЕ РЕШЕНИЯ 2.0 | +7 812 336-58-68 | www.glavmech.ru

DRAWINGS

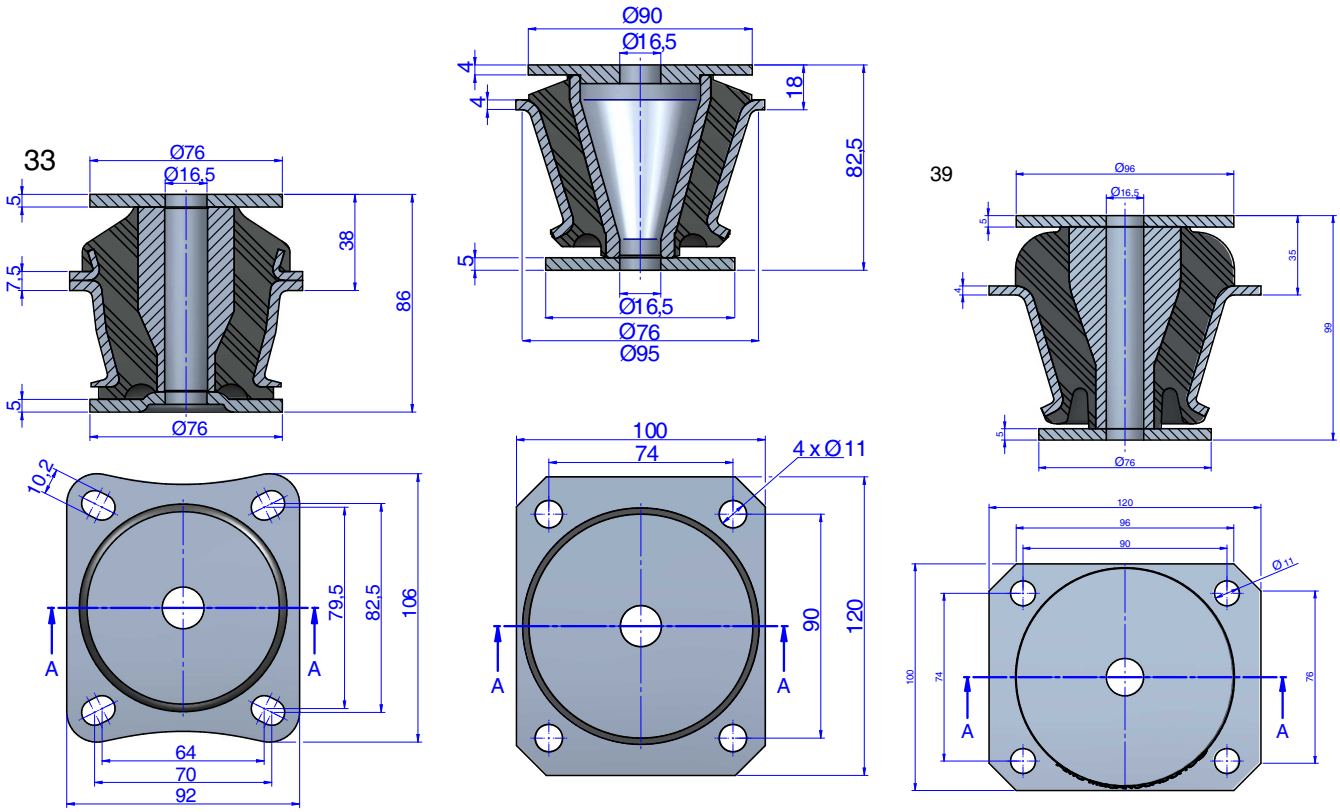

DIMENSIONS

Type	Weight (gr.)	Load (kg)	Shore	Code
33	1462	300	45 Sh	137075
		600	60 Sh	137077
		900	70 Sh	137078
36	1410	400	45 Sh	137171
		700	60 Sh	137172
		1100	70 Sh	137173
39	1438	400	40 Sh	137981
		600	50 Sh	137982
		900	60 Sh	137983
		1100	70 Sh	137984

AMC MECANOCAUCHO
Industrialdea Zona A - Pab. 35.
Asteasu E-20159, Gipuzkoa
Spain

Tel.: +34 943 69 61 02
Fax: +34 943 69 62 19

sales@amcsa.es

www.mecanocaucho.com
www.akustik.com

In order to adapt its products to the state of the art, AMC S.A. reserves the right to modify the conception and manufacture of the materials presented in this catalogue without prior notice.

SOLID CONE

ТЕХНИЧЕСКИЕ РЕШЕНИЯ 2.0 | +7 812 336-58-68 | www.glavmech.ru

DRAWINGS

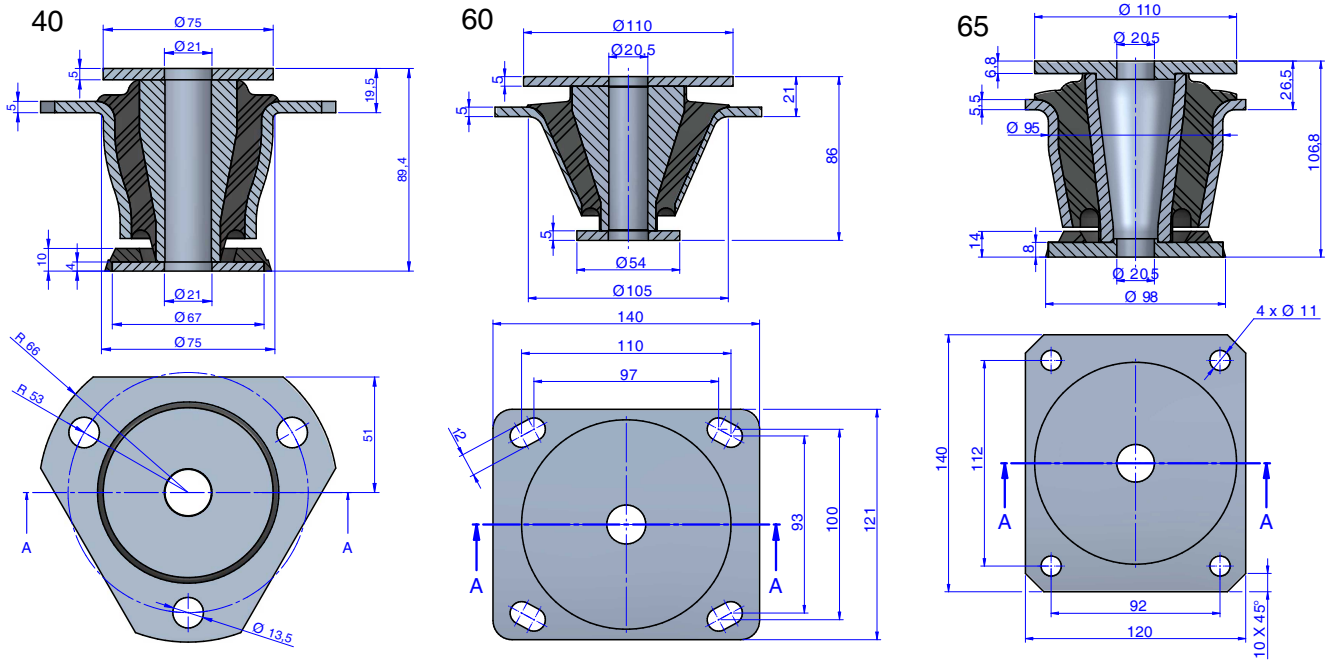

DIMENSIONS

Type	Weight (gr.)	Load (kg)	Shore	Code
40	1216	420	45 Sh	137081
		690	60 Sh	137082
		1080	70 Sh	137083
60	1821	900	45 Sh	137091
		1250	60 Sh	137092
		1560	70 Sh	137093
65	2965	500	50 Sh	137176
		1100	65 Sh	137177
		1560	75 Sh	137178

AMC MECANOCAUCHO
Industrialdea Zona A - Pab. 35.
Asteasu E-20159, Gipuzkoa
Spain

Tel.: +34 943 69 61 02
Fax: +34 943 69 62 19

sales@amcsa.es

www.mecanocaucho.com
www.akustik.com

In order to adapt its products to the state of the art, AMC S.A. reserves the right to modify the conception and manufacture of the materials presented in this catalogue without prior notice.

DRAWINGS

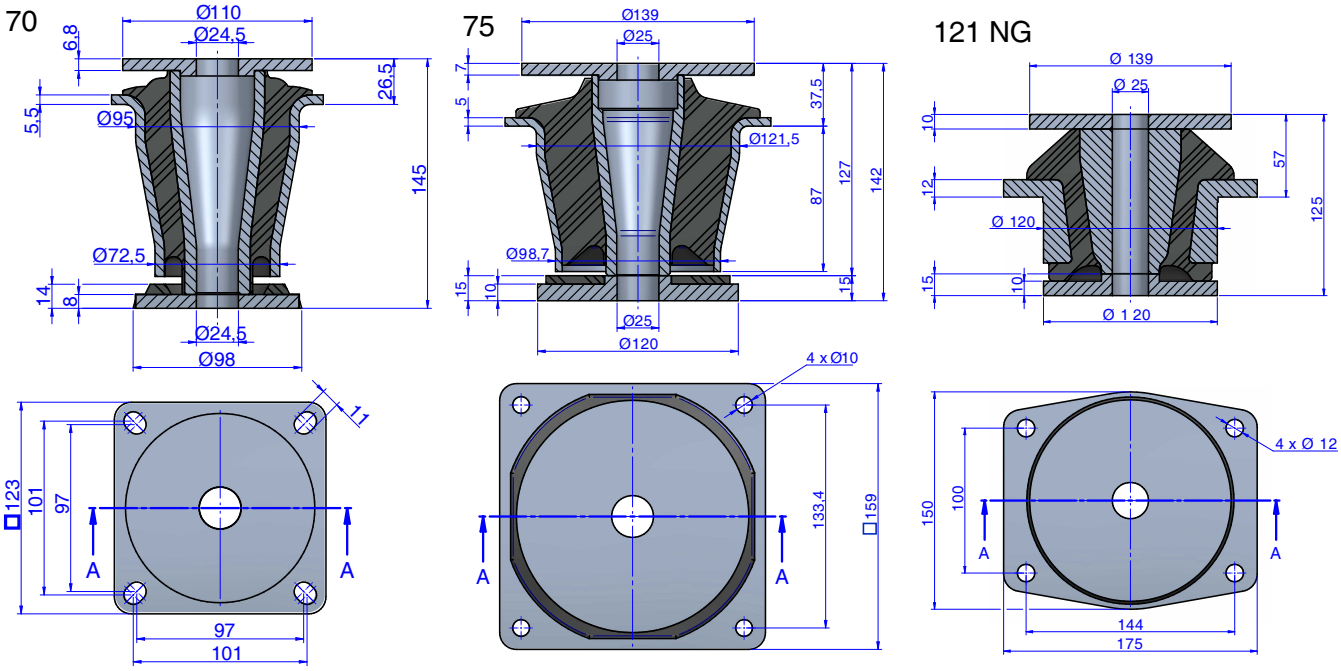

DIMENSIONS

Type	Weight (gr.)	Load (kg)	Shore	Code
70	3450	1000	45 Sh	137101
		2100	60 Sh	137102
		2500	70 Sh	137103
75	4230	850	45 Sh	137786
		1600	60 Sh	137787
121 NG	7840	1750	55 Sh	137830
		2000	65 Sh	137833

AMC MECANOCAUCHO
Industrialdea Zona A - Pab. 35.
Asteasu E-20159, Gipuzkoa
Spain

Tel.: +34 943 69 61 02
Fax: +34 943 69 62 19

sales@amcsa.es

www.mecanocaucho.com
www.akustik.com

In order to adapt its products to the state of the art, AMC S.A. reserves the right to modify the conception and manufacture of the materials presented in this catalogue without prior notice.

SOLID CONE

ТЕХНИЧЕСКИЕ РЕШЕНИЯ 2.0 | +7 812 336-58-68 | www.glavmech.ru

DRAWINGS

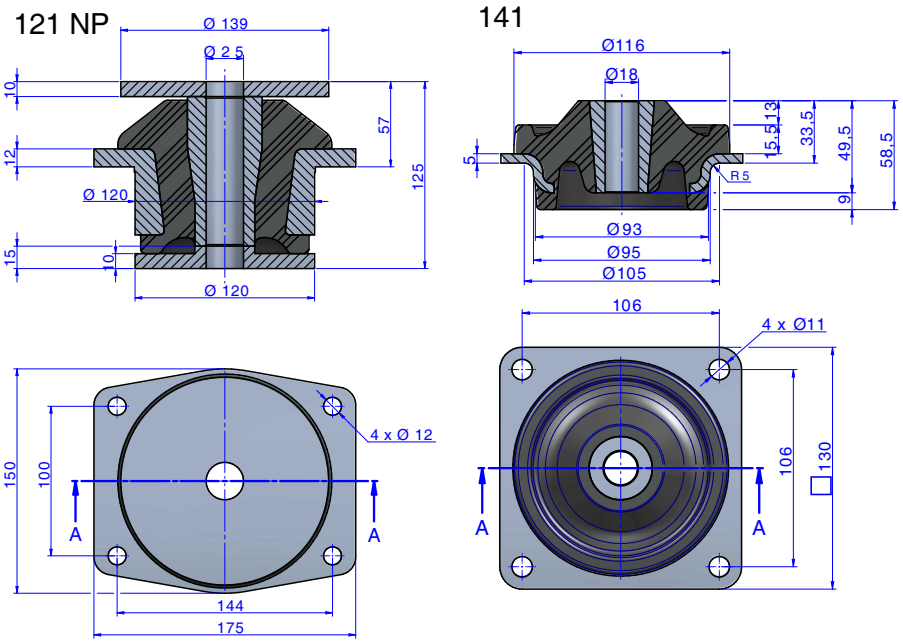

DIMENSIONS

Type	Weight (gr.)	Load (kg)	Shore	Code
121 NP	6940	730	45 Sh	137841
		1200	55 Sh	137829
141	1039	175	50 Sh	137891
		250	60 Sh	137893

AMC MECANOCAUCHO
Industrialdea Zona A - Pab. 35.
Asteasu E-20159, Gipuzkoa
Spain

Tel.: +34 943 69 61 02
Fax: +34 943 69 62 19

sales@amcsa.es

www.mecanocaucho.com
www.akustik.com

In order to adapt its products to the state of the art, AMC S.A. reserves the right to modify the conception and manufacture of the materials presented in this catalogue without prior notice.

SOLID CONE

ТЕХНИЧЕСКИЕ РЕШЕНИЯ 2.0 | +7 812 336-58-68 | www.glavmech.ru

Elastical properties

NATURAL FREQUENCIES AMC MECANOCAUCHO® TYPE SOLID CONE 01-33

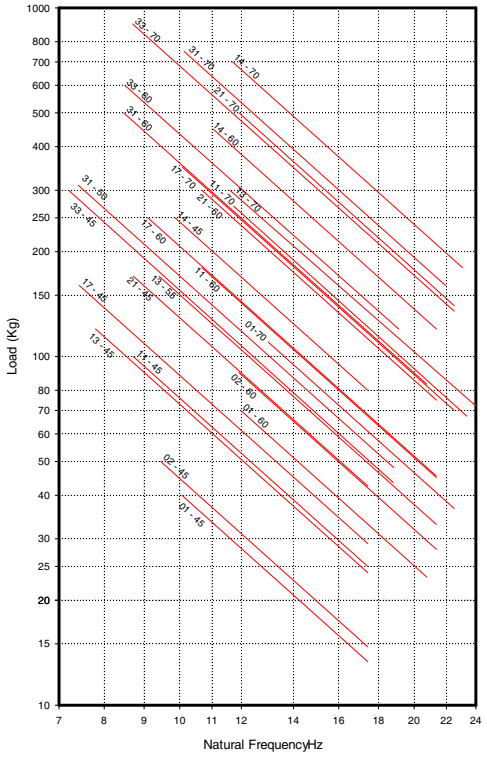

LOAD DEFLECTION GRAPHS AMC MECANOCAUCHO® TYPE SOLID CONE 01-33

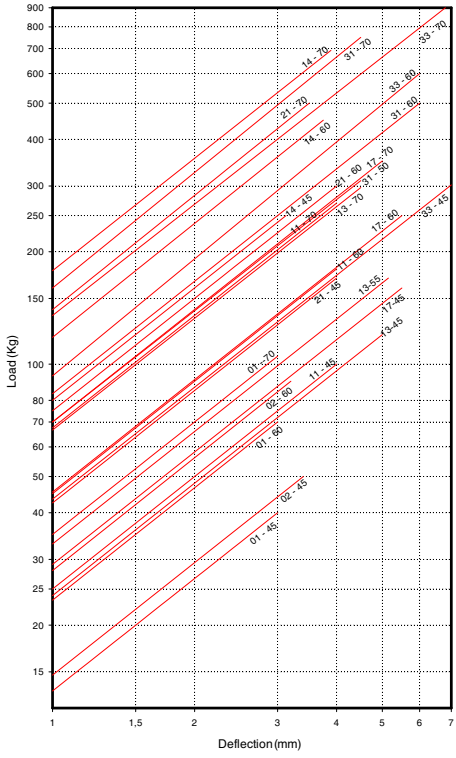

NATURAL FREQUENCIES AMC MECANOCAUCHO® SOLID CONES 36-141

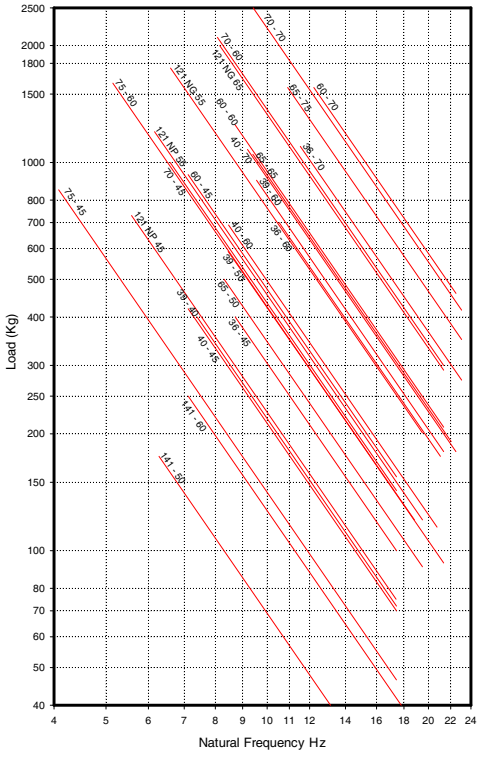

LOAD DEFLECTION GRAPHS AMC MECANOCAUCHO® SOLID CONES 36-141

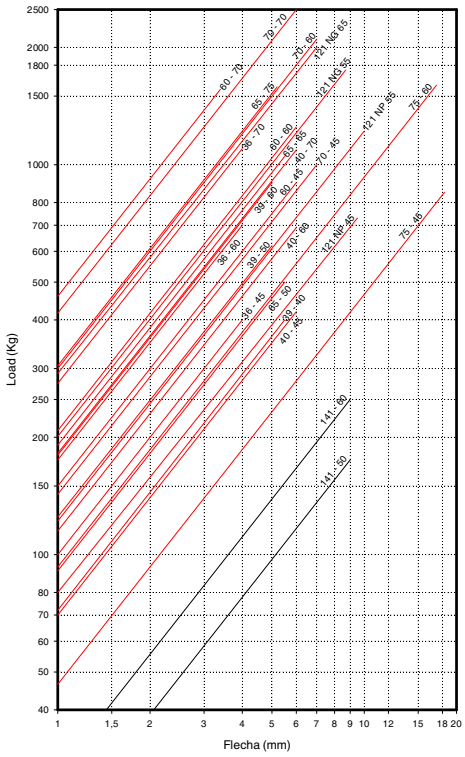

AMC MECANOCAUCHO
Industrialdea Zona A - Pab. 35.
Asteasu E-20159, Gipuzkoa
Spain

Tel.: +34 943 69 61 02
Fax: +34 943 69 62 19

sales@amcsa.es

www.mecanocaucho.com
www.akustik.com

In order to adapt its products to the state of the art, AMC S.A. reserves the right to modify the conception and manufacture of the materials presented in this catalogue without prior notice.